YLI ELECTRONIC

Mortise Mount Magnetic Lock

Specification

Model	YM-280M(SS304)	YM-280M-S(SS304)
Dimension	231.5Lx41Wx25.5H(mm)	231.5Lx41Wx25.5H(mm)
Armature plate	180Lx38.8Wx13.2H(mm)	180Lx38.8Wx13.2H(mm)
Voltage	DC 12Vor DC 24V	DC 12Vor DC 24V
Current	12V/500mA±10%; 24V/250mA±10%	12V/500mA±10%; 24V/250mA±10%
Holding force	280kg(600Lbs)	280kg(600Lbs)
Signal output	NO	Lock signal(NO/NC/COM)
Suitable for	Wooden door , Metal door , Fireproof door	Wooden door , Metal door , Fireproof door
Cover finish	Stainless Steel	Stainless Steel
IP rate	IP-65	IP-65
Operating temp	-20~+55℃(14-131F)	-20~+55℃(14-131F)
Weight	2.1kg	2.1kg

Dimension(unit:mm)

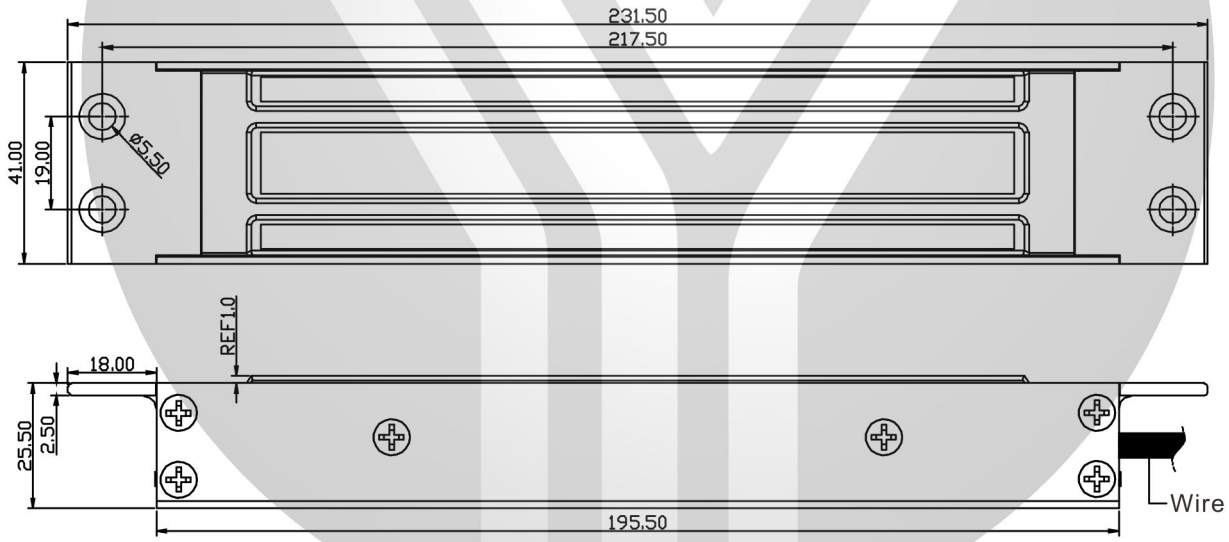

Circuit board diagram

Magnetic Lock

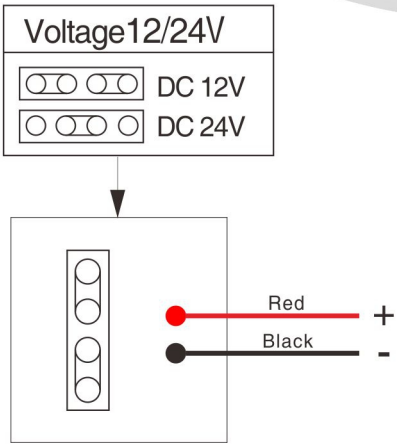

Magnetic Lock with Signal Output

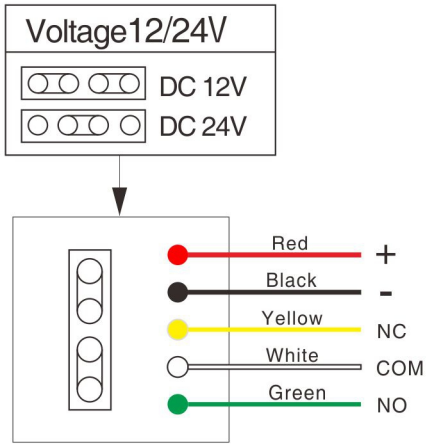

Installation

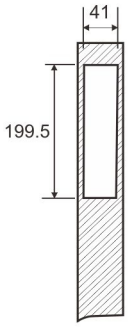

(1) Dig the hole

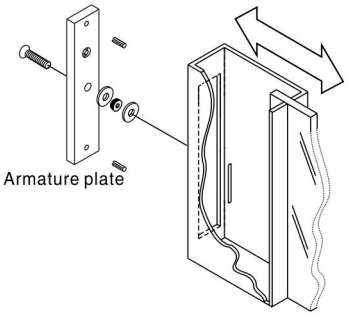

(2) Fix screws

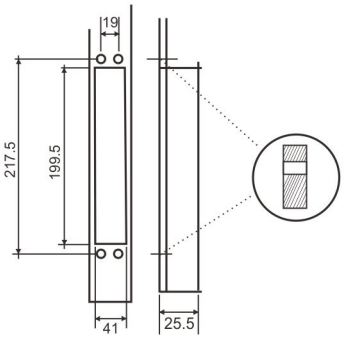

(3) Dig the hole

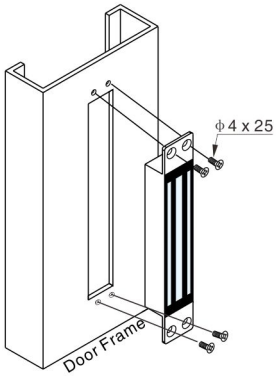

(4) Fix screws

NOTES:

Please read specification before installing magnetic lock

A. Handle the equipment carefully. The holding force can be reduced by damaging the lock body or armature plate.

B. The magnetic lock should be fixed tightly on the door frame and the armature plate on the door leaf. Kit provided allows the armature plate to pivot its center, thus compensating misalignment caused by other factors.

C. Template can only be used with the door in normally closed circumstance.

D. Please fix screws of magnetic lock firmly.

E. Detect signal of door state: the limit of reed switch and dry contact is 0.5A/30VDC. Don't overload.
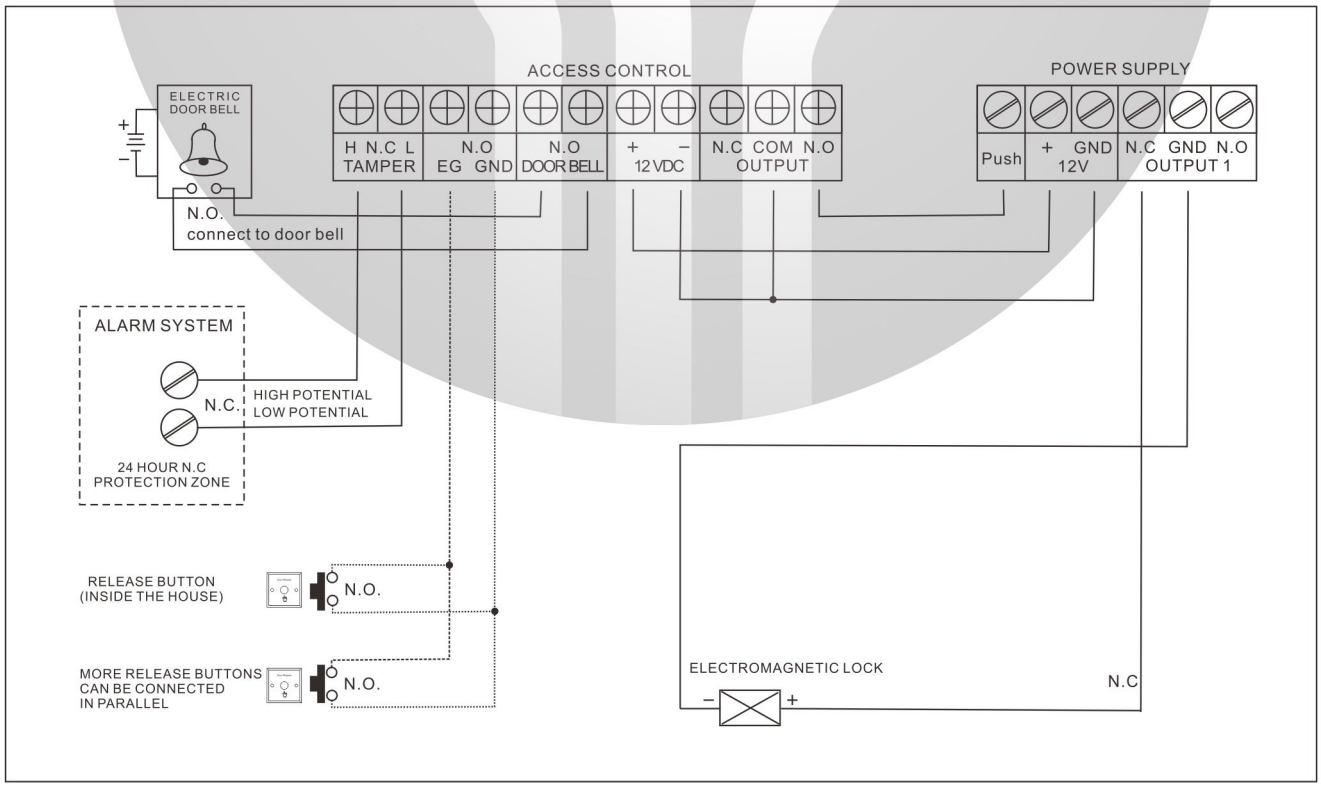
Wire Connection